ORTAL
YOUR LIFE. YOUR FIRE

75 TS
Stand Alone

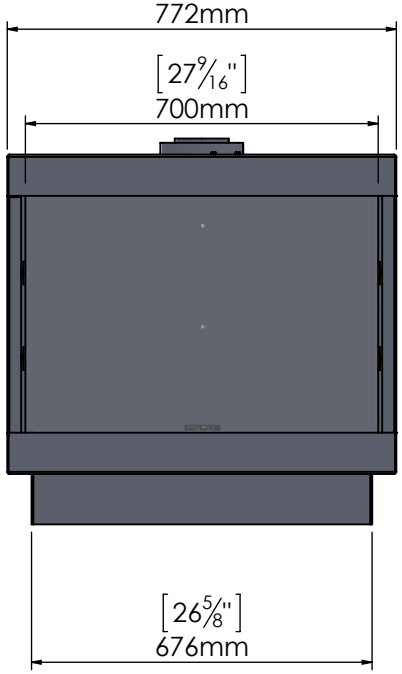

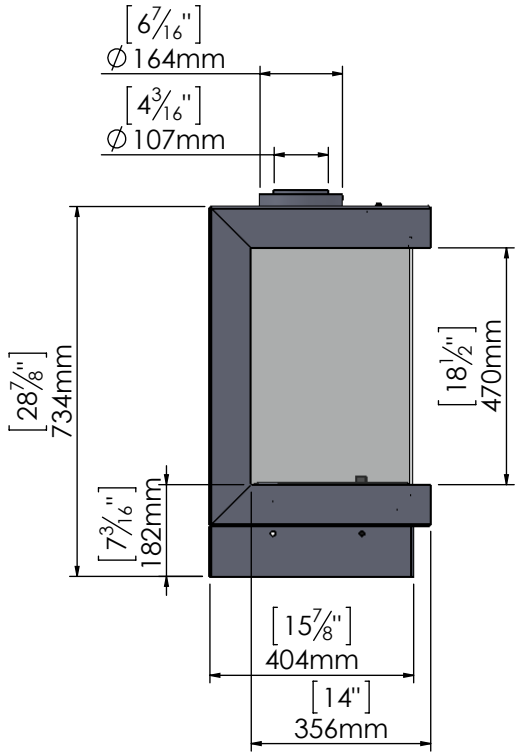

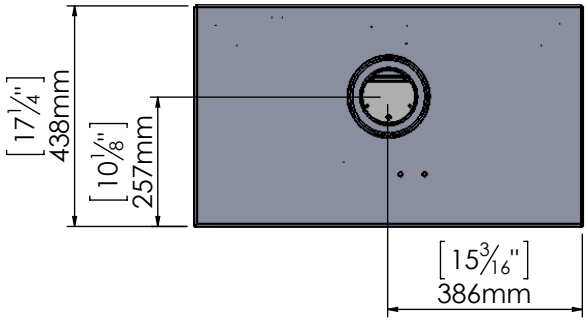

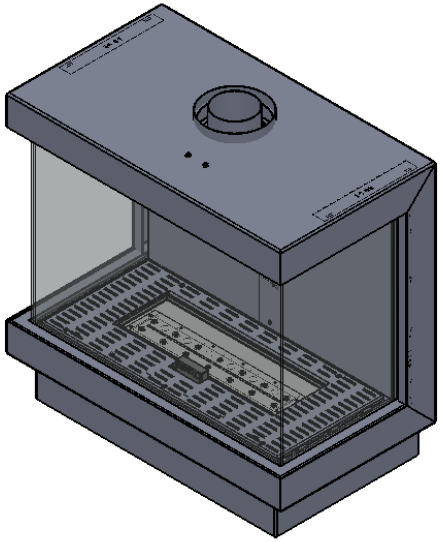

8/8/2017